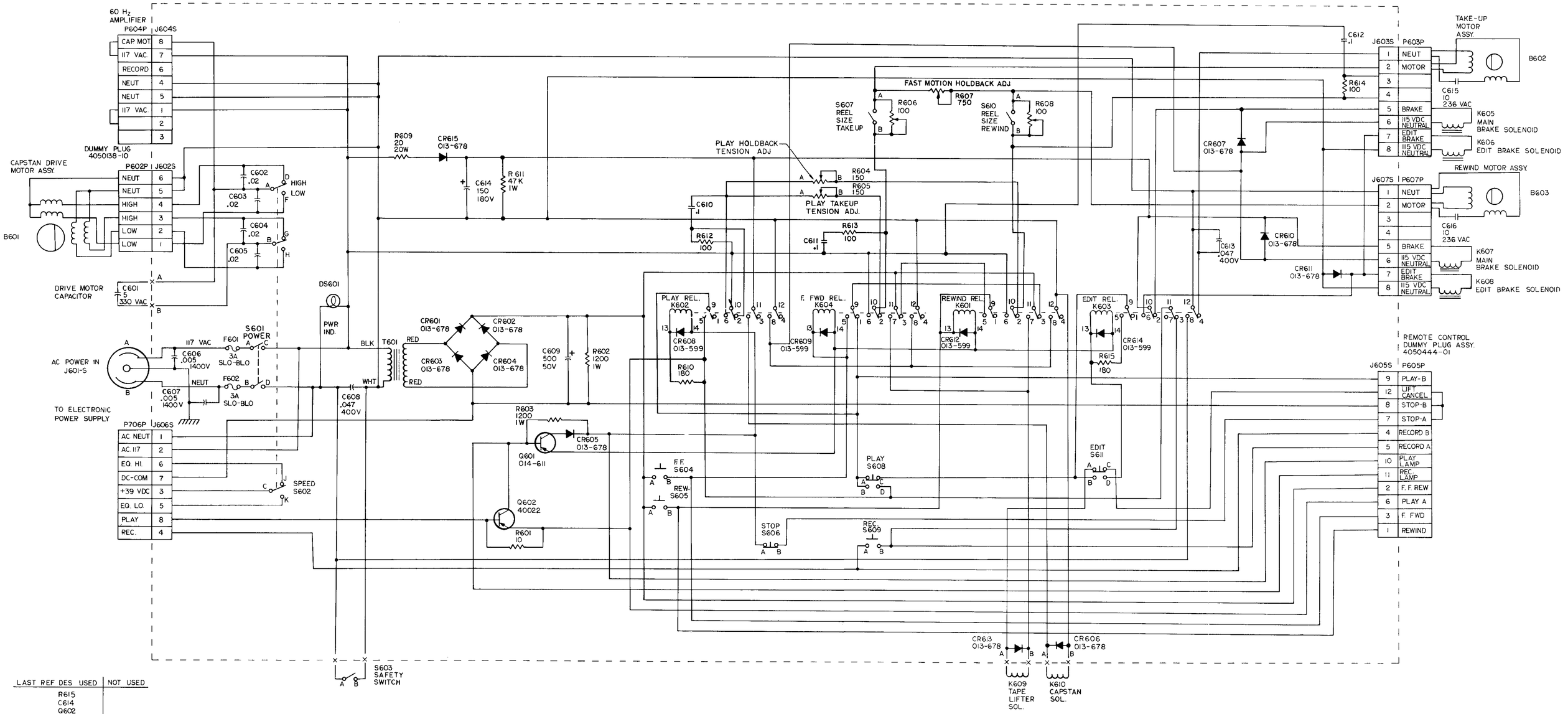

LAST REF DES USED	NOT USED
R615	
C614	
Q602	
F602	
CR615	
T601	
DS601	
J607S	
P607P	P601P
K610	
S611	
B603	

NOTES: UNLESS OTHERWISE SPECIFIED

1. ALL RESISTOR VALUES ARE IN OHMS, 1/2 W, 10%.
2. ALL CAPACITOR VALUES ARE IN MICROFARADS

Fig. 6—20. Tape Transport Schematic

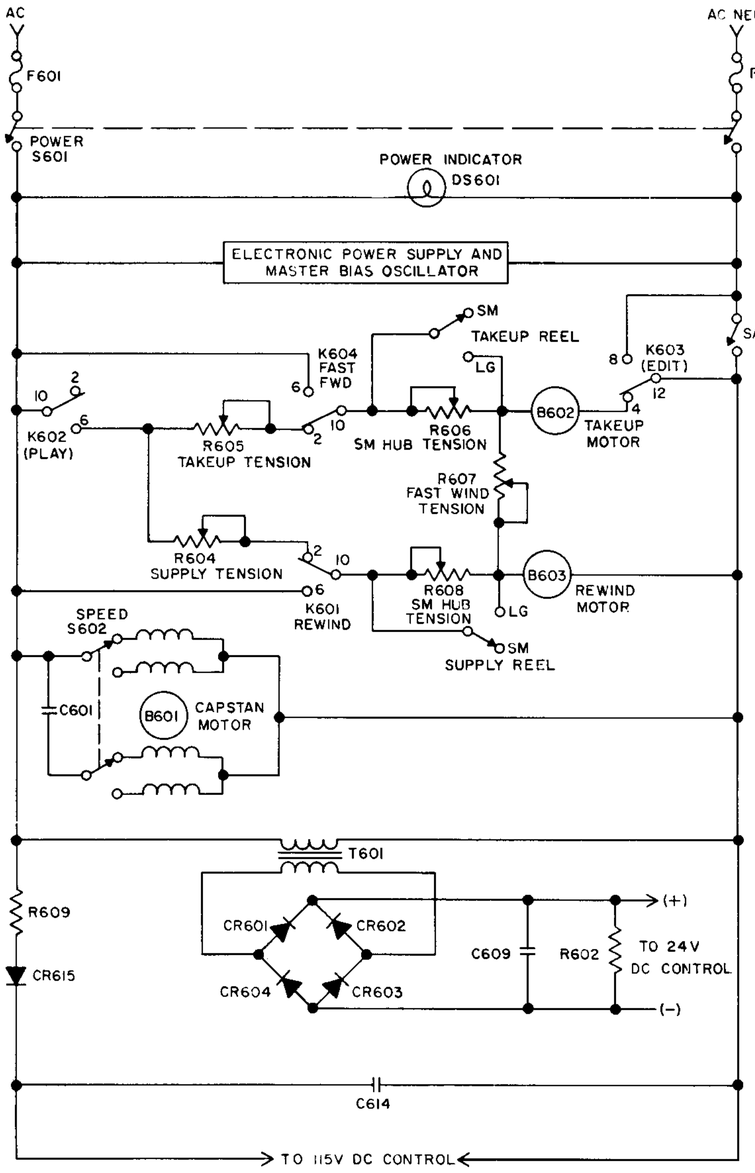

AC CONTROL

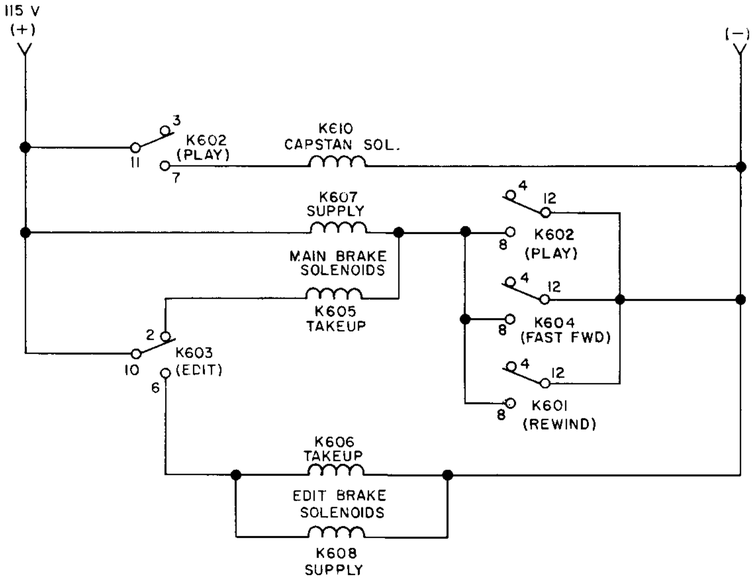

115 VDC CONTROL

RELAYS	SOLENOIDS
K601 REWIND	K605 MAIN BRAKE, TAKEUP
K602 PLAY	K606 EDIT BRAKE, TAKEUP
K603 EDIT	K607 MAIN BRAKE, SUPPLY
K604 FAST FWD	K608 EDIT BRAKE, SUPPLY
K1 RECORD (ELECTRONICS)	K609 TAPE LIFTER
	K610 CAPSTAN

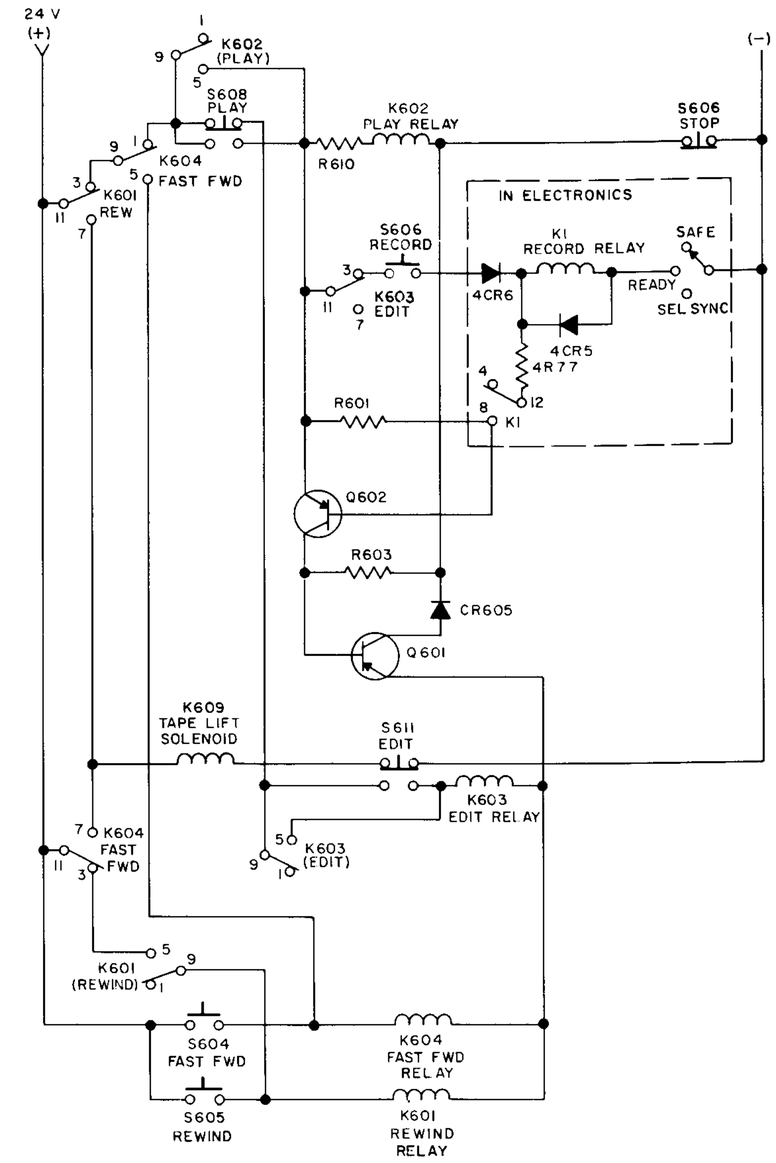

24 VDC CONTROL

Fig. 6—21. Tape Transport Schematic, Simplified

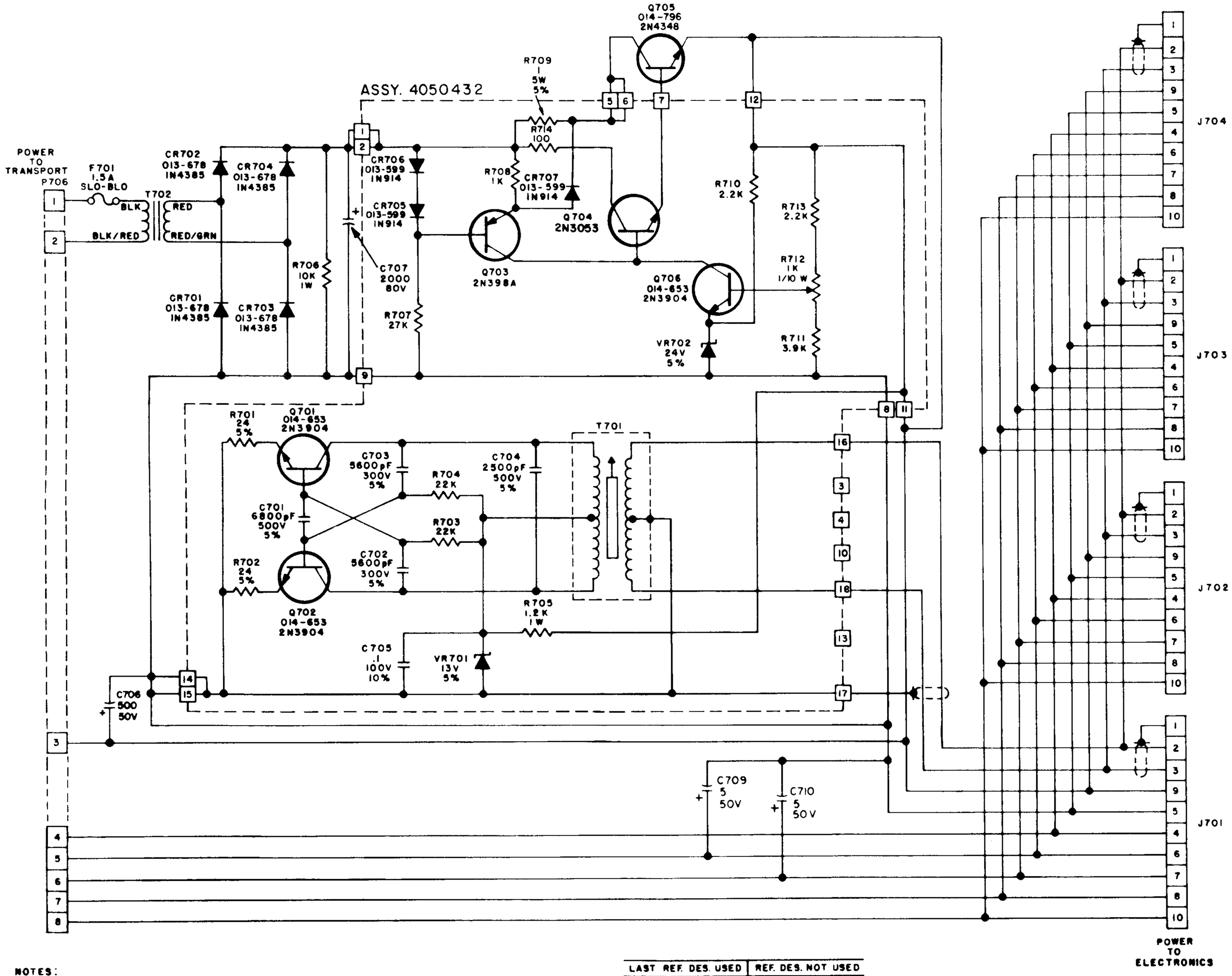

NOTES:
UNLESS OTHERWISE SPECIFIED
1. ALL CAPACITOR VALUES ARE IN MICROFARADS, RATINGS AS INDICATED.
2. ALL RESISTORS VALUES ARE IN OHMS, 1/2 WATT, 10%.

LAST REF. DES. USED	REF. DES. NOT USED
C710	C708
CR707	
Q706	
VR702	
T702	
R714	

Fig. 6—22. Power Supply Schematic, Record/Reproduce

RECORD/REPRODUCE
POWER SUPPLY ASSEMBLY
CATALOG NO. 4020274-03
(see Fig. 6-22)

Ref. No.	Qty	DESCRIPTION		Ampex Part No.
C701	1	Capacitor, mica; 6800 pfd, ±5%, 500 vdcw		056-108
C702	2	Capacitor, mica; 5600 pfd, ±5%, 300 vdcw		034-507
C703	-	Same as C702		
C704	1	Capacitor, mica; 2500 pfd, ±5%, 500 vdcw		034-994
C705	1	Capacitor, mylar; 0.1 mfd, ±10%, 100 vdcw		055-106
C706	1	Capacitor, electrolytic; 500 mfd, -10+150%, 50 vdcw		031-945
C707	1	Capacitor, electrolytic; 2000 mfd, -10+250%, 80 vdcw	*	4550147-03
C709	2	Capacitor, electrolytic; 5 mfd, -10+75%, 50 vdcw		031-205
C710	-	Same as C709		
CR701	4	Diode, silicon, large signal rectifier	*	013-678
CR702	-	Same as CR701	*	
CR703	-	Same as CR701	*	
CR704	-	Same as CR701	*	
CR705	3	Diode, silicon, small signal switching		013-599
CR706	-	Same as CR705		
CR707	-	Same as CR705		
F701	1	Fuse, slo-blo; 1.5 amp, 125v	*	070-075
J701	4	Connector, receptacle; 10 sockets, female	*	146-018
J702	-	Same as J701	*	
J703	-	Same as J701	*	
J704	-	Same as J701	*	
P706	1	Connector, plug; 8 pins, male	*	145-013
Q701	3	Transistor, silicon		014-653
Q702	-	Same as Q701		
Q703	1	Transistor, Germanium, 2N398A		014-704
Q704	1	Transistor, silicon; 2N3053		014-590
Q705	1	Transistor, silicon, 2N4348		014-796
Q706	-	Same as Q701		
R701	2	Resistor, fixed, comp; 24 ohms, ±5%, 1/2w; RC20GF240J		041-533
R702	-	Same as R701		
R703	2	Resistor, fixed, comp; 22,000 ohms, ±10%, 1/2w; RC20GF223K		041-064
R704	-	Same as R703		
R705	1	Resistor, fixed, comp; 1,200 ohms, ±10%, 1w; RC32GF122K		041-147
R706	1	Resistor, fixed, comp; 10,000 ohms, ±10%, 1w; RC32GF103K	*	041-158
R707	1	Resistor, fixed, comp; 27,000 ohms, ±10%, 1/2w; RC20GF273K		041-065
R708	1	Resistor, fixed, comp; 1,000 ohms, ±10%, 1/2w; RC20GF102K		041-048
R709	1	Resistor, fixed, wirewound; 1 ohm, ±5%, 5w		059-016
R710	2	Resistor, fixed, comp; 2,200 ohms, ±10%, 1/2w; RC20GF222K		041-052
R711	1	Resistor, fixed, comp; 3,900 ohms, ±10%, 1/2w; RC20GF392K		041-055
R712	1	Resistor, variable, comp; 1,000 ohms, ±30%, 1/10w		044-370
R713	-	Same as R710		
R714	1	Resistor, fixed, comp; 100 ohms, ±10%, 1/2w; RC20GF101K		041-038
T701	1	Coil, bias oscillator		4580123-01
T702	1	Transformer, power supply	*	4580156-01
VR701	1	Diode, silicon, zener; 13 volt, ±5%		013-747
VR702	1	Diode, silicon, zener; 24 volt, ±5%		013-712
	2	Card Guide		530-102
	1	Fuse holder, short body		085-001
	2	Pad, transistor (for Q703, Q704)		280-131

NOTE: All items except those marked * are on printed circuit board, Catalog No. 4050432-03

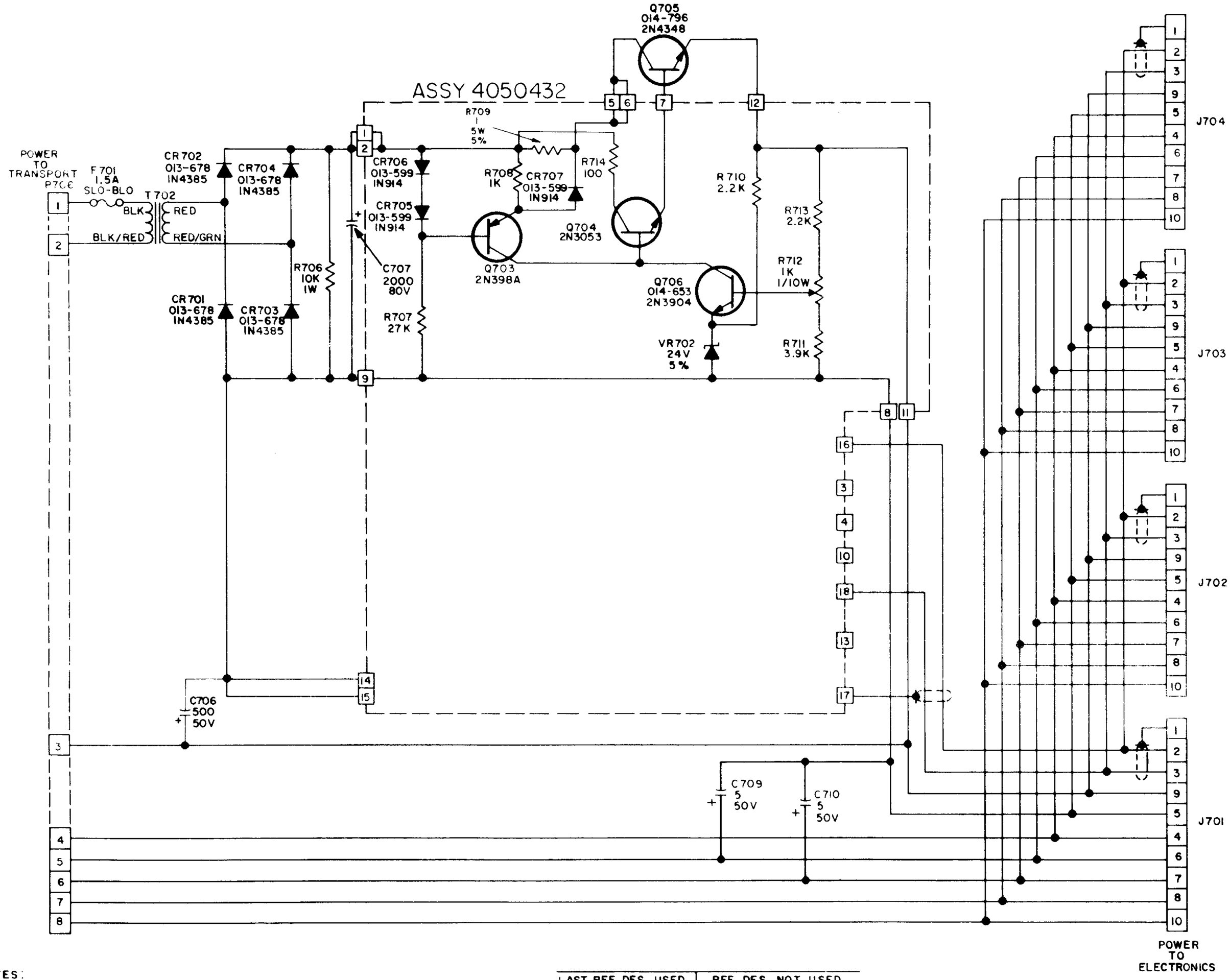

NOTES:
1. UNLESS OTHERWISE SPECIFIED
ALL CAPACITOR VALUES ARE IN MICROFARADS, RATINGS AS INDICATED.
ALL RESISTOR VALUES ARE IN OHMS, 1/2WATT, 10%

LAST REF. DES. USED	REF. DES. NOT USED
C710	C701 TO C705
CR707	C708
Q706	Q701,702
VR702	VR701
T702	T701
R714	R701 TO R705

Fig. 6—23. Power Supply Schematic, Reproduce-only

REPRODUCE-ONLY
POWER SUPPLY ASSEMBLY
CATALOG NO. 4020274-02
(see Fig. 6-23)

Ref. No.	Qty.	DESCRIPTION		Ampex Part No.
C706	1	Capacitor, electrolytic; 500 mfd,-10+150%, 50 vdcw		031-945
C707	1	Capacitor, electrolytic; 2000 mfd, -10+250%, 80 vdcw	*	4550147-03
C708	1	Capacitor, mylar; 0.1 mfd, ±10%, 100 vdcw		055-106
C709	2	Capacitor, electrolytic; 5 mfd, -10+75%, 50 vdcw		031-205
C710	-	Same as C709		
CR701	4	Diode, silicon, large signal rectifier	*	013-678
CR702	-	Same as CR701	*	
CR703	-	Same as CR701	*	
CR704	-	Same as CR701	*	
CR705	3	Diode, silicon, small signal switching		013-599
CR706	-	Same as CR705		
CR707	-	Same as CR705		
F701	1	Fuse, slo-blo; 1.5 amp, 125v	*	070-075
J701	4	Connector, receptacle; 10 sockets, female	*	146-018
J702	-	Same as J701	*	
J703	-	Same as J701	*	
J704	-	Same as J701	*	
P706	1	Connector, plug; 8 pins, male	*	145-013
Q703	1	Transistor, Germanium, 2N398A		014-704
Q704	1	Transistor, silicon; 2N3053		014-590
Q705	1	Transistor, silicon, 2N4348	*	014-796
Q706	1	Transistor, silicon		014-653
R706	1	Resistor, fixed, comp; 10,000 ohms, ±10%, 1w; RC32GF103K	*	041-158
R707	1	Resistor, fixed, comp; 27,000 ohms, ±10%, 1/2w; RC20GF273K		041-065
R708	1	Resistor, fixed, comp; 1,000 ohms, ±10%, 1/2w; RC20GF102K		041-048
R709	1	Resistor, fixed, wirewound; 1 ohm, ±5%, 5w		059-016
R710	2	Resistor, fixed, comp; 2,200 ohms, ±10%, 1/2w; RC20GF222K		041-052
R711	1	Resistor, fixed, comp; 3,900 ohms, ±10%, 1/2w; RC20GF392K		041-055
R712	1	Resistor, variable, comp; 1,000 ohms, ±30%, 1/10w		044-370
R713	-	Same as R710		
R714	1	Resistor, fixed, comp; 100 ohms, ±10%, 1/2w; RC20GF101K		041-038
T702	1	Transformer, power supply	*	4580156-01
VR702	1	Diode, silicon, zener; 24 volt, ±5%		013-712
	2	Card Guide		530-102
	1	Fuse holder, short body		085-001
	2	Pad, transistor (for Q703, Q704)		280-131

NOTE: ALL ITEMS EXCEPT THOSE MARKED * ARE ON PRINTED CIRCUIT BOARD CATALOG NO. 4050432-04

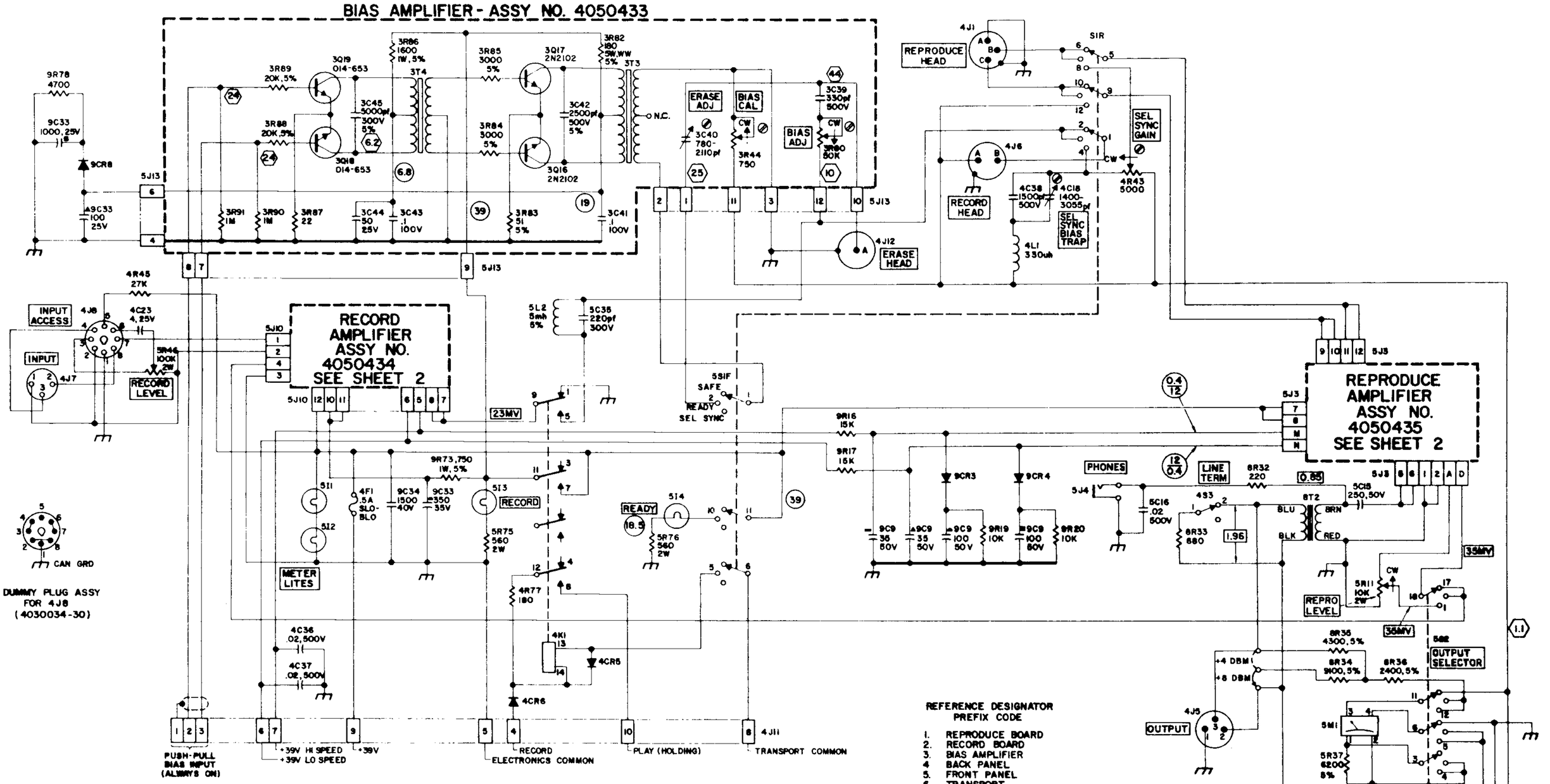

NOTES: UNLESS OTHERWISE SPECIFIED

1. ALL RESISTOR VALUES ARE IN OHMS, 1/2W, 10%.
2. ALL CAPACITOR VALUES ARE IN MICROFARADS, AT INDICATED VOLTAGE.
3. ALL DIODES ARE TYPE 013-599.

INDICATES VOLTS D.C. MEASURED WITH A HIGH IMPEDANCE VTVM.

INDICATES VOLTS R.M.S. MEASURED WITH A HIGH IMPEDANCE VTVM AT OPERATING LEVEL OF 1000 HZ.

INDICATES VOLTS R.M.S. MEASURED WITH A HIGH IMPEDANCE VTVM AT BIAS FREQUENCY.

INDICATES VOLTS D.C. MEASURED WITH A 20,000 Ω/V METER.

REFERENCE DESIGNATOR PREFIX CODE

1. REPRODUCE BOARD
2. RECORD BOARD
3. BIAS AMPLIFIER
4. BACK PANEL
5. FRONT PANEL
6. TRANSPORT
7. POWER SUPPLY
8. RIGHT PANEL (FROM FRONT)
9. LEFT PANEL (FROM FRONT)
10. REPRODUCE EQUALIZER
11. RECORD EQUALIZER

LAST REF DES USED			REF DES NOT USED		
C57	K1	S3	R39-42	C19-22	
CR8	L2	T4	R81	C38	
F1	M1		R74	C46-49	
I4	Q19		R92-100	J2	
J13	R109			R79	

Fig. 6—24A. Electronics Schematic, Record/Reproduce

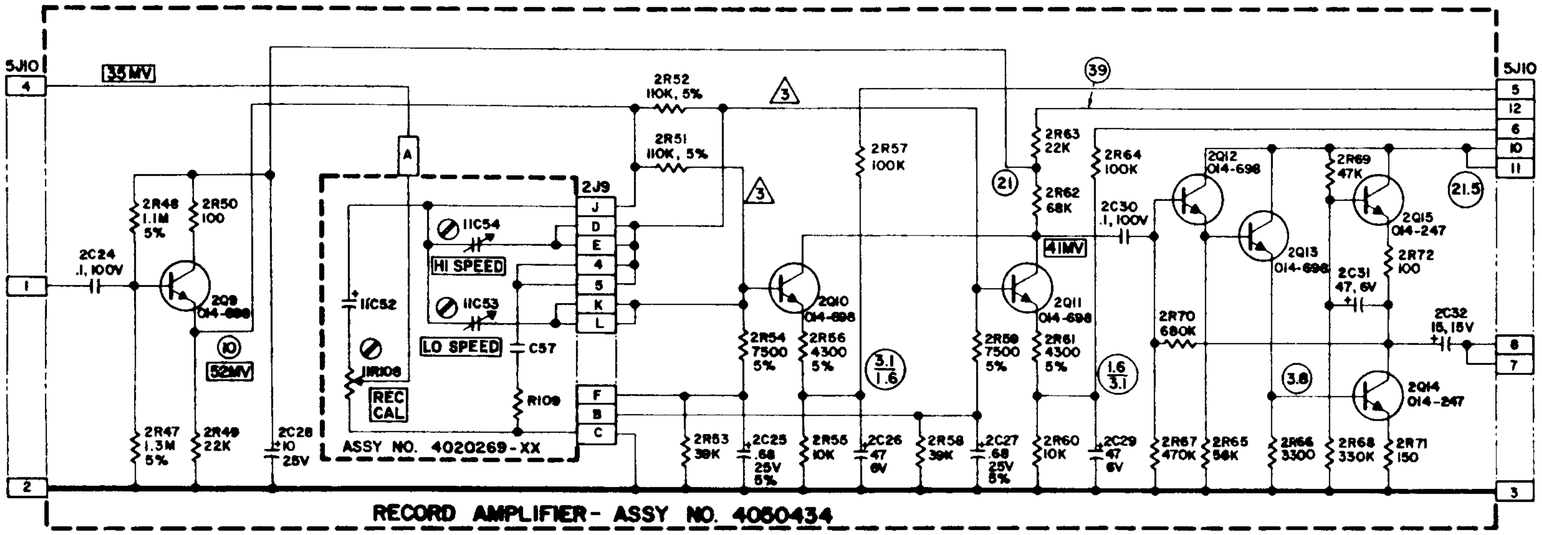

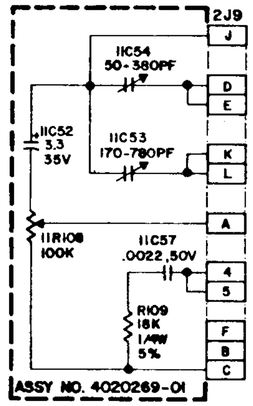

7 1/2 - 15 IPS NAB
(RECORD EQUALIZER)

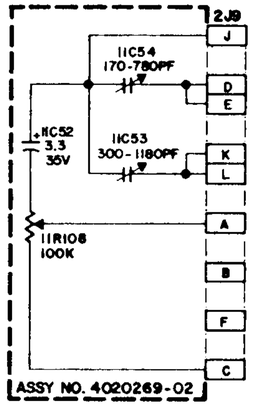

3 3/4 - 7 1/2 IPS NAB
(RECORD EQUALIZER)

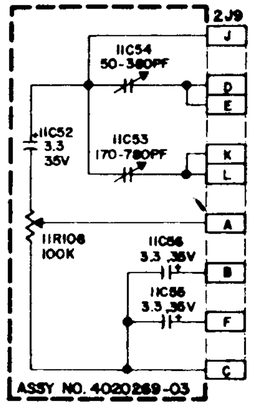

7 1/2 - 15 IPS I.E.C. (CCIR)
(RECORD EQUALIZER)

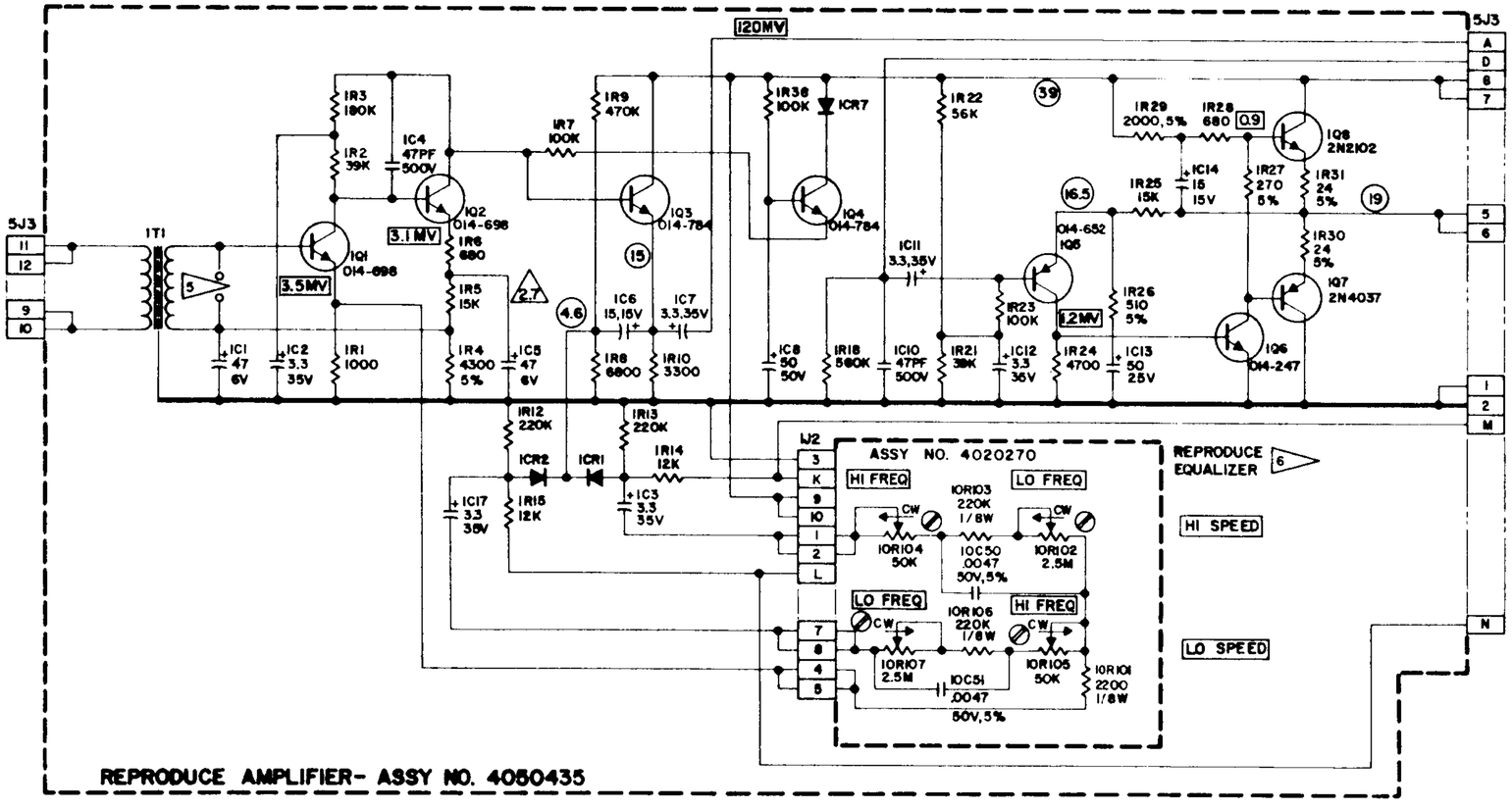

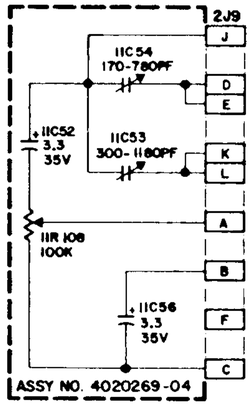

3 3/4 - 7 1/2 IPS I.E.C. (CCIR)
(RECORD EQUALIZER)

Fig. 6—24B. Electronics Schematic, Record/Reproduce

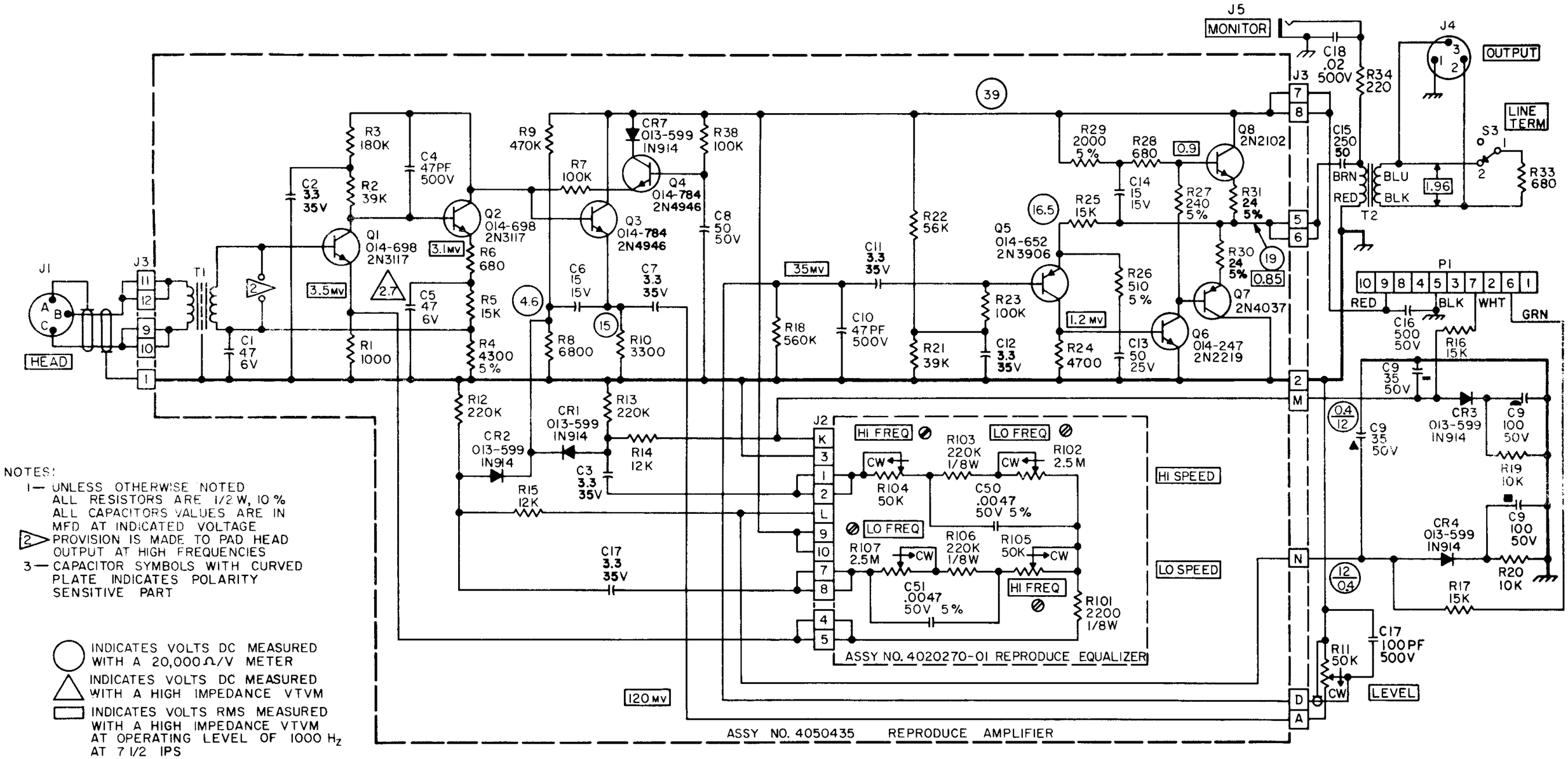

NOTES:

1— UNLESS OTHERWISE NOTED
ALL RESISTORS ARE 1/2 W, 10 %
ALL CAPACITORS VALUES ARE IN MFD AT INDICATED VOLTAGE

2 PROVISION IS MADE TO PAD HEAD OUTPUT AT HIGH FREQUENCIES

3— CAPACITOR SYMBOLS WITH CURVED PLATE INDICATES POLARITY SENSITIVE PART

○ INDICATES VOLTS DC MEASURED WITH A 20,000 Ω/V METER

△ INDICATES VOLTS DC MEASURED WITH A HIGH IMPEDANCE VTVM

▭ INDICATES VOLTS RMS MEASURED WITH A HIGH IMPEDANCE VTVM AT OPERATING LEVEL OF 1000 Hz AT 7 1/2 IPS

LAST REF DES USED	REF DES NOT USED
R34 R107 C18 C51 J5 CR7 T2 Q8 P1	CR5,6

Fig. 6—25. Electronics Schematic, Reproduce-only

REPRODUCE-ONLY ELECTRONIC MODULE
(without equalizer)
CATALOG NO. 4020150
(See Fig. No. 6-25)

Ref. No.	Qty	DESCRIPTION	Ampex Part No.
	1	Reproduce Amplifier, printed circuit board, assembly	4050435-02
		(All components on this board same as record/reproduce)	
		Components not on printed circuit board	
C9	1	Capacitor, electrolytic, 4 section; 100, 100, 35, 35 mfd; 50 vdcw	4550147-05
C15	1	Capacitor, electrolytic; 250 mfd, 50 vdcw	031-126
C16	1	Capacitor, electrolytic; 500 mfd, -10+150%, 50 vdcw	031-134
C17	1	Capacitor, mica; 100 pfd, ±5%, 500 vdcw	034-177
C18	1	Capacitor, ceramic disc; .02 mfd, 500 vdcw	030-001
CR3	2	Diode, silicon, small signal, switching	013-599
CR4	-	Same as CR3	
J1	1	Connector, receptacle, 3 con tact, male; MS3102A10SL-3P (repro. head)	143-008
J3	1	Connector, assembly, 12 contact, printed circuit board (repro. board)	4030269-03
J4	1	Connector, receptacle, audio, 3 contacts, male (output)	147-999
J5	1	Connector, telephone jack; open circuit, 2 conductor (monitor)	148-015
R11	1	Resistor, variable, potentiometer; 50,000 ohms, ±20%, 1/4w (level control)	4520151-01
R16	2	Resistor, fixed, comp; 15,000 ohms, ±10%, 1/2w; RC20GF153K	041-062
R17	-	Same as R16	
R19	2	Resistor, fixed, comp; 10,000 ohms, ±10%, 1/2w; RC20GF103K	041-060
R20	-	Same as R19	
R33	1	Resistor, fixed, comp; 680 ohms, ±10%, 1/2w; RC20GF681K	041-046
R34	1	Resistor, fixed, comp; 220 ohms, ±10%, 1/2w; RC20GF221K	041-040
S3	1	Switch, rotary, DPST (line termination)	4620172-10
T2	1	Transformer, output	4580193-01
	1	Cable, interconnecting (captive)	4050087-01
	1	Connector, plug, 10 contacts, male	143-250
	6'	Cable, 4 conductor	616-019
	2	Card Guides	4230133-02
	1	Retainer, capacitor	301-136